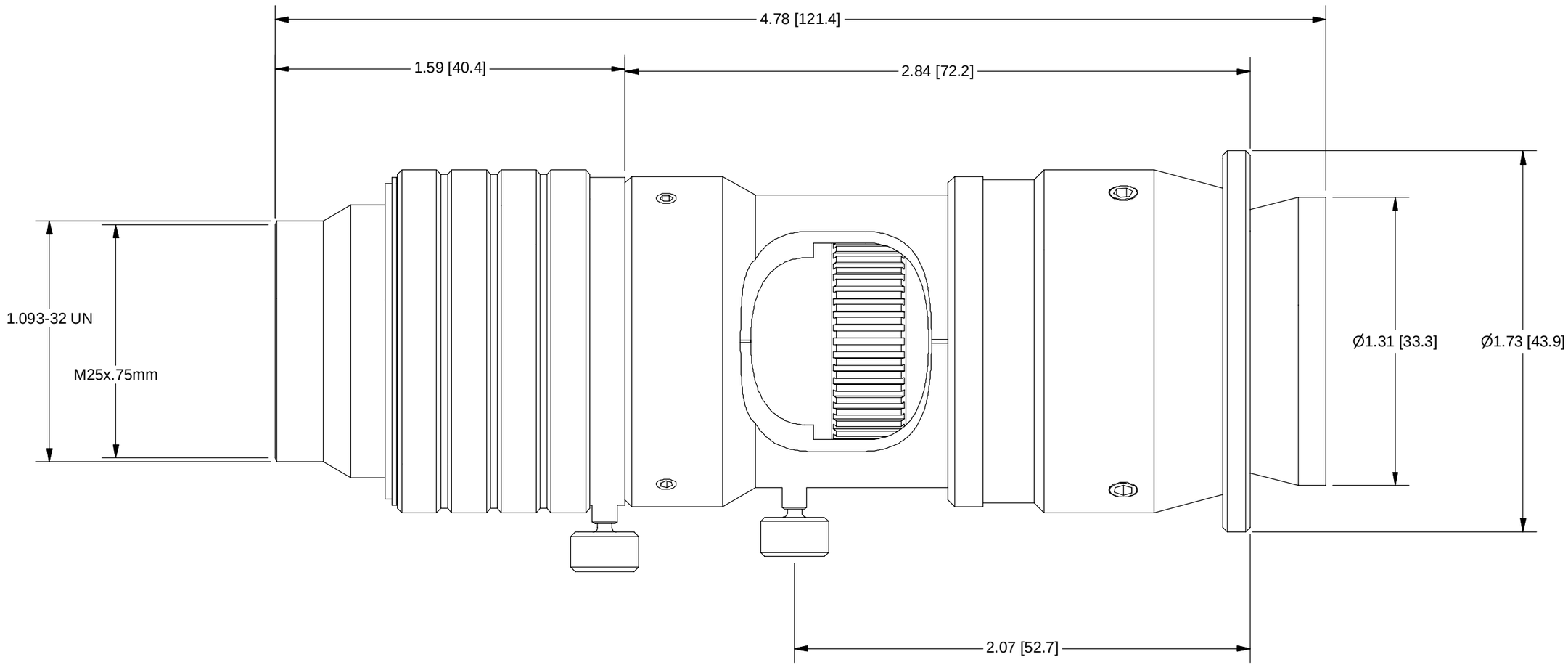

OUTLINE

UNLESS OTHERWISE SPECIFIED DIMENSIONS ARE IN INCHES AND INCLUDE CHEMICALLY APPLIED OR PLATED FINISHES	THE CONTENTS OF THIS DOCUMENT ARE PROPRIETARY TO NAVITAR, ITS USE IS AUTHORIZED ONLY FOR RESPONDING TO REQUEST FOR QUOTATION OR PERFORMANCE OF WORK FOR NAVITAR	NAVITAR ROCHESTER, NEW YORK
SCALE: 1:1		ZM 6000-II, 12mm FF, LONG
WEIGHT: .56LBM	0.0 inch 1.0	
DR: R. PODLENA		
CH:	0.0 mm 25.0	SIZE B / 1-60135 / REV D
PROJECT #:	DO NOT SCALE DRAWING	
DATE DR: 5/28/2003		SHEET 2 OF 2